CS 8570D

B/W Progressive Scan CCD Video Camera

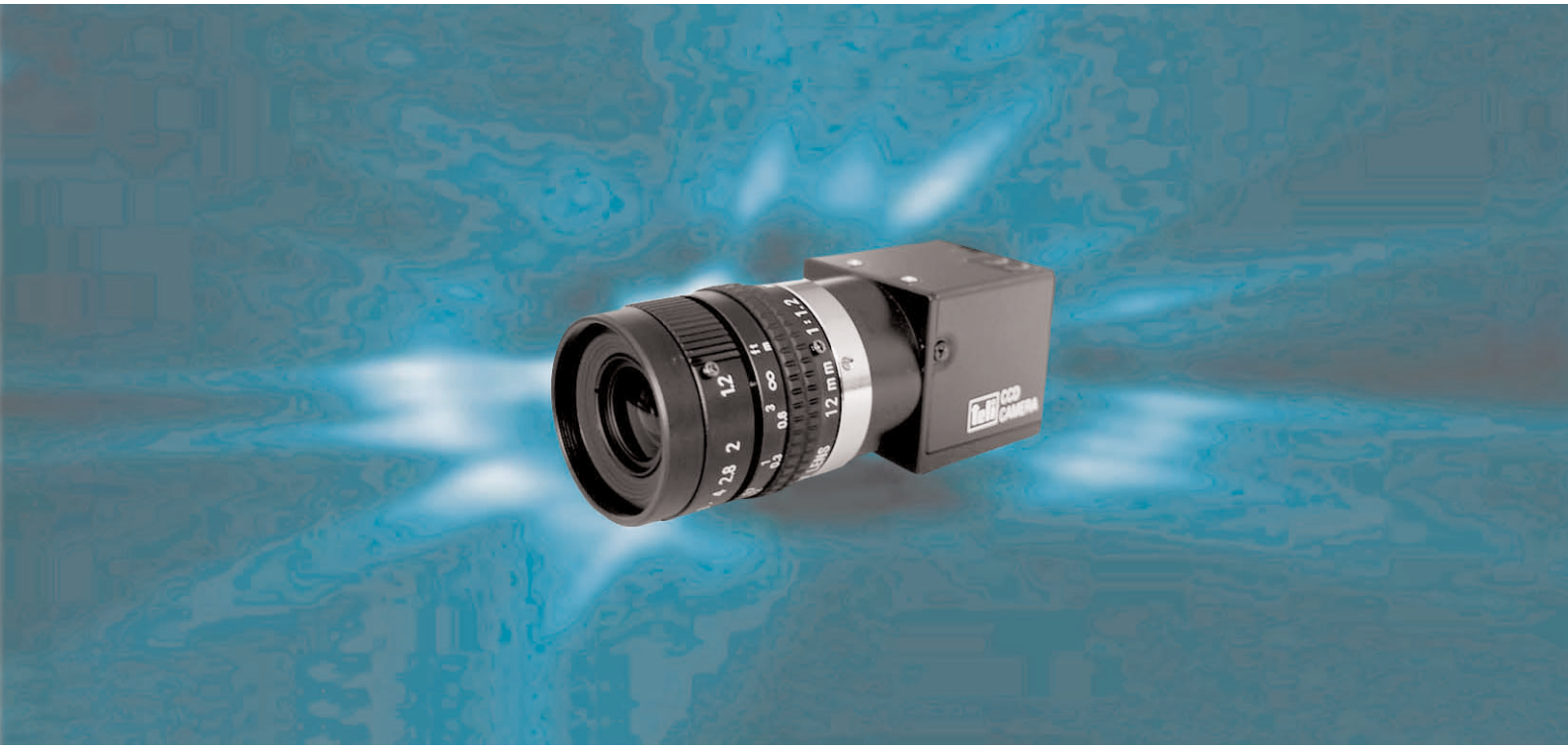

- **1/2" Progressive Scan CCD Image Sensor with Square Pixel ICX414AL-6**
- **High Speed Image Output, 60fps**
- **Random Trigger Shutter (RTS)**
- **Restart / Reset, Internal/External Sync**
- **Multiple Shutter**
- **Partial Scan Mode**
- **Ultra Compact and Light Weight**
- **Application**
  - Machine vision
  - Factory automation
  - Quality control

NEW ELECTRONIC TECHNOLOGY

Technical Data

Type	***CS 8570D***
Image sensor	1/2" Progressive Scan Interline CCD Type: ICX 414 AL-6
Video output pixels	648 (H) x 494 (V)
Unit pixel size	9.9 (H) x 9.9 (V) µm (Square grid array)
Image Area	6.4 (H) x 4.8 (V) mm
Scanning lines	525 lines
TV system	Special format (Non-conforming to EIA)
Video output format	1/60s Non-interlace mode 1/120s 2:1 interlace mode. Switching via rear-panel DIP SW
Sync system	Internal/External automatic switch-over
Aspect ratio	4:3
Illumination	Standard: 400lx, F 5.6 Minimum: 4lx (F 1.4) (GAIN MAX. approx. 50% video output)
Video output	VS 1.0V(p-p)/75 Ohm, DC coupled
Resolution	485 TV lines (H)
S/N	Standard: 52 dB(p-p)rms
Gain	FIX (fixed) gain: Factory-shipped preset level MANU (manual) gain: Setting through GAIN VR FIX/MANU switching via rear-panel DIP SW
Gamma correction	Fixed at 1.0
White-clip level	Approx. 840mV(p-p) (Excluding SYNC)
Power source	DC12V +/-10%, Ripple voltage: 50mV(p-p) or less
Power consumption	Approx. 125mA
Internal sync signal spec	
Base clock frequency	24.545MHz (1CLK) +/-200ppm
H sync frequency	31.468kHz (1H=780CLK)
V sync frequency	59.94Hz (Under non-interlace), 119.88Hz (Under 2:1 interlace)
External sync signal spec	
Ext. sync input signal	HD/VD
Input level	2 ~ 5V(p-p) / 2 ~ 4V(p-p) / 75Ohm
Input impedance	75Ohm/High impedance, 10k Ohm (switching via rear-panel SW), (Initial factory setting: High)
Interlace	1/60s non-interlace or 1/120s 2:1 interlace
Polarity	Negative
Pulse width	HD: 3.2 +/- 1µs (LOW), VD: From 125 through 400µs (LOW)
Repeating frequency	f_H= 31.468 kHz +/-1%, f_V= f_H/262.5 or f_H/525
Phase difference	HD/VD: 0 +/-5.0µs, 1/f_H/2 +/-5.0µs
Trigger spec	
Input level	LOW level: 0-0.5V(p-p), HIGH level: 4-5V(p-p)
Input impedance	High impedance (10k Ohm)
Capture timing	Rising edge detection (Positive)
Pulse width	Minimum 2µs, Maximum 1/8s
Electronic shutter spec	
Normal Shutter	Shutter speed setting via rear-panel SW (Initial:OFF) 8 steps selectable (=OFF, 1/200, 1/500, 1/1000, 1/2000, 1/4000, 1/8000, 1/20000s)
RTS (Random Trigger Shutter)	

No.	Reset	Exposure	Sync
1	Non-reset	Rear SW (FIX mode)	Internal
2			Consecutive HD / Consecutive VD IN
3			Consecutive HD / Single VD IN
4		TRIG pulse width (PULSE width mode)	Internal
5			Consecutive HD / Consecutive VD IN
6			Consecutive HD / Single VD IN
7	V reset	Rear SW (FIX mode)	Internal
8			Consecutive HD IN
9	SYNC reset		Internal
10	V reset	TRIG pulse width (PULSE width mode)	Internal
11			Consecutive HD IN

Technical Data

Type	*CS 8570D*
Multiple Shutter	Multiple shutter via ext. trigger signal and ext. VD signal
Restart / Reset	Restart / reset available via ext. VD signal (Switching via rear panel DIP SW, Initial OFF)

Partial Scan

No.	Scan mode	Sync	Reset	E-shutter Normal	E-shutter RTS
1	1/2 partial	Internal	Non-reset	Enabled [Option]	Enabled
2			V-reset	Disabled	
3		Consecutive HD VD IN	Non-reset	Enabled [Option]	Enabled
4		Consecutive HD (VD) IN	V-reset	Disabled	
5	1/4 partial	Internal	Non-reset	Enabled [Option]	Enabled
6			V-reset	Disabled	
7		Consecutive HD VD IN	Non-reset	Enabled [Option]	Enabled
8		Consecutive HD (VD) IN	V-reset	Disabled	
9	programmable	Consecutive HD VD IN	Non-reset	Enabled [Option]	Enabled [Option]

Reset mode

Non-reset

	1/2 partial scan	1/4 partial scan
1/60s non-interlace	525 H	525 H
1/120s interlace	262.5 H	262.5 H

V-reset

	1/2 partial scan	1/4 partial scan
1/60s non-interlace	265 H	131 H
1/120s interlace	131.5 H	65.5 H

Partial signal	Option
Input level	LOW level: 0-0.5V(p-p), HIGH level: 4-5V(p-p)
Input impedance	High impedance (10k Ohm)
Polarity	Positive (Hi : High-speed transfer)

Mechanical spec

External dimension	29(W) x 29(H) x 39.5(D) mm
Weight	Approx. 42g
Lens mount	C-Mount

Ambient condition

	Performance guaranteed: Temperature from 0 through 40°C / Humidity from 30 through 90% (no condensing)
Operation	-5°C to 45°C / Humidity 10% to 90% (no condensing)
Storage	-20°C to 60°C / Humidity 10% to 90% (no condensing)
EMI	Conform to EN61000-6-4

Output Connector HR10A-10P-12S

Relative Spectrum Response
**Including lens characteristics, excluding light source characteristics*

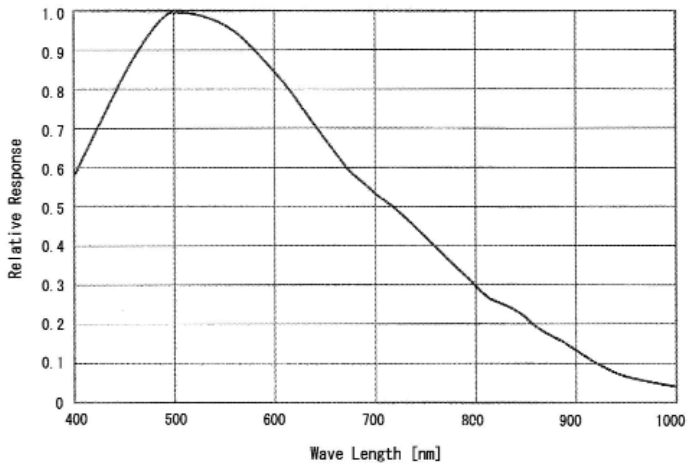

Outline

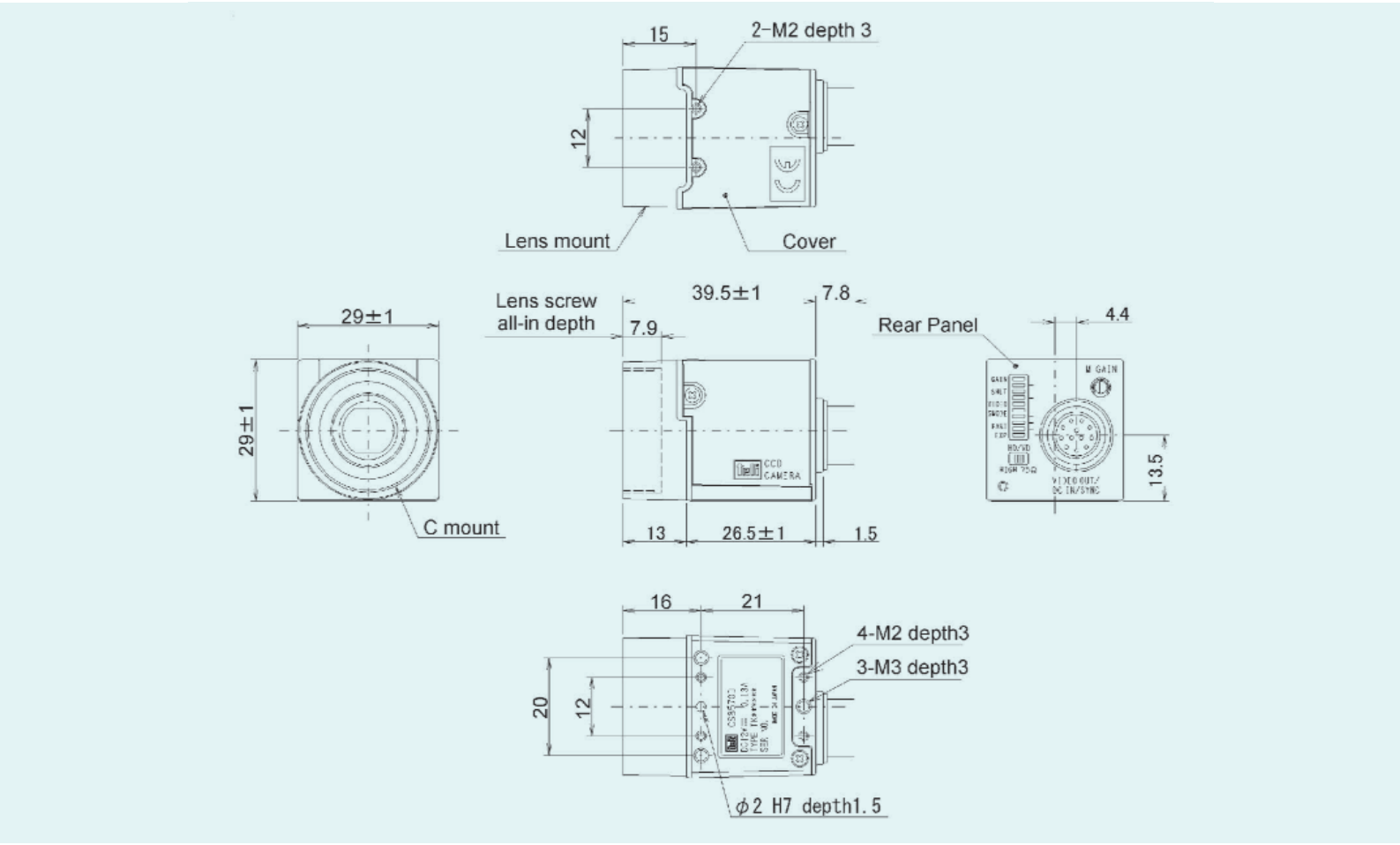

NEW ELECTRONIC TECHNOLOGY Vertriebs-GmbH
Lerchenberg 7 • D 86923 Finning, Germany • Phone: +49(0)88 06 - 92 34-0 • Fax: +49(0)88 06 - 92 34-77
E-mail: info@net-gmbh.com
NET USA, Inc.
3037-45th Street • Highland, IN 46322 • Phone: (219) 934-9042 • Fax: (219) 934-9047
E-mail: info@net-usa-inc.com
www.net-gmbh.com

CS8570D/03-2005/S.F-N.